Garant

Additional shelf with central locking, Width: 430mm

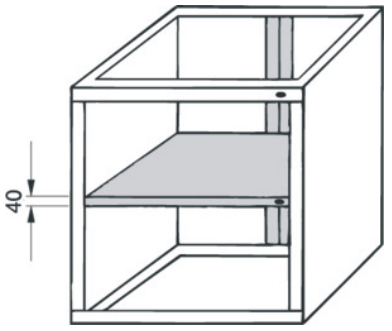

Order data

Order number	934870 430
GTIN	4045197172112
Item class	91W

Description

Version:
For 2 individually locking drawer units within a drawer body (without doors).
Suitable for:
No. 934800 size 430/540 and size 430/620 and No. 933720.

Technical description

Installation height	40 mm
Width	430 mm
Type of product	Storage shelf